BladeKit

Ficha Técnica

Características Generales de Generación Eléctrica: Generador Eólico Vertical, BladeKit

El BladeKit, contiene un sistema de control que trabaja por medio de electroimán. Transforma el viento en energía con alta potencia. El BladeKit ajusta automáticamente su velocidad y dirección. Su diseño contiene 5 aspas de aleación de aluminio y fibra de vidrio reforzada además de ser novedoso, compacto, ligero, mayor duración y estabilidad.

El controlador cuenta con dos sistemas de control por medio de modulación por ancho de pulsos (PWM) en la tensión constante y el sistema de carga y descarga de tres fases.

El inversor es utilizado en más de una docena de países, con una potencia eficiente del 97%. Adecuados y eficientes para su uso residencial e industrial pequeño o mediano. El inversor se utiliza conectado a la red eléctrica, con un sistema on grid, utilizado para ahorrar cualquier exceso de electricidad. Evita un desperdicio de energía. Configurado con un alto rango de voltaje de entrada. Tecnología MPPT (seguimiento del punto máximo de potencia) Instalación rápida y sencilla.

3000W
440V/3F/60Hz

Aplicaciones de Generación Eléctrica: Generador Eólico Vertical, BladeKit

El BladeKit es utilizado en semáforos, postes de luz, en jardines, ideal para para Industrias, centros comerciales, residencias, hospitales, escuelas, edificios, restaurantes, hoteles, oficinas.

Garantía de Generación Eléctrica: Generador Eólico Vertical, BladeKit

El BladeKit, cuenta con 1 año de garantía sujeto a cláusulas VentDepot.

Características Técnicas Específicas de Generación Eléctrica: Generador Eólico Vertical, BladeKit

Clave	Potencia del Generador w	Voltaje de Salida v	Velocidad del Viento Estimado		Velocidad Mínima para Funcionamiento		Velocidad Máxima del Viento		Turbina		Temperatura	Peso Kg	Dimensiones con Empaque de Cartón en cm		
			m/s	km/hr	m/s	km/hr	m/s	km/hr	Diámetro Ø m	Aspas			Ancho	Alto	Largo
MXDAK-001	3000	380	12	43.2	2	7.2	35	126	2.85	5	-40°C a 80°C	75	290	305	290

VentDepot
Industrial and Engineering Supply

BladeKit

Ficha Técnica

Características Técnicas Específicas de Generación Eléctrica: Controlador Vertical On Grid, BladeKit.											
Clave	Potencia	Rango de Voltaje de Entrada	Corriente de Salida	Temperatura	Ruido	Tensión Constante	Sistema	Peso	Dimensiones con Empaque de Cartón en cm		
	Kw	V	V	°C	dB	V		Kg	Ancho	Alto	Largo
MXDAK-001	3	380	16	-30 a 60	40	380	On Grid	37	105	89	63

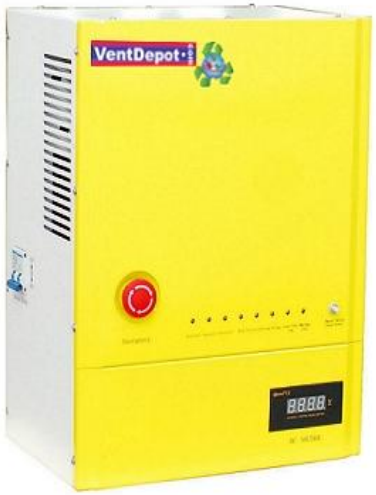

Características Técnicas Específicas de Generación Eléctrica: Generador Eólico: Inversor On Grid, BladeKit.										
Clave	Potencia del Generador	Rango de Voltaje de Entrada	Voltaje de Salida			Grado de Protección	Peso	Dimensiones con Empaque de Cartón en cm		
	Kw	V	V	F	Hz	IP	Kg	Ancho	Alto	Largo
MXDAK-001	3	380	440	3	60	65	16	20	40	45

BladeKit

Ficha Técnica

Dimensiones Específicas de Generación Eléctrica: Generador Eólico Vertical, BladeKit.		
Clave	A Pulg.	B Pulg.
MXDAK-001	112.21	118.11

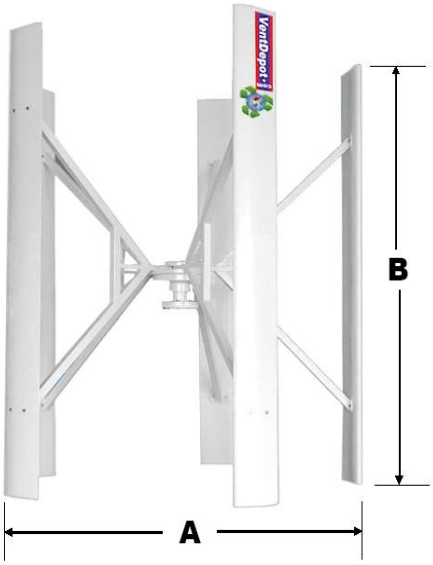

Dimensiones Específicas de Generación Eléctrica: Controlador On Grid, BladeKit			
Clave	A	B	C
	Pulg	Pulg	Pulg
MXFIK-001	19	18	12

BladeKit

Ficha Técnica

Dimensiones Específicas de Generación Eléctrica: Generador Eólico: Inversor On Grid, BladeKit.			
Clave	A	B	C
	Pulg	Pulg	Pulg
MXFIK-001	7.9	15.7	17.7

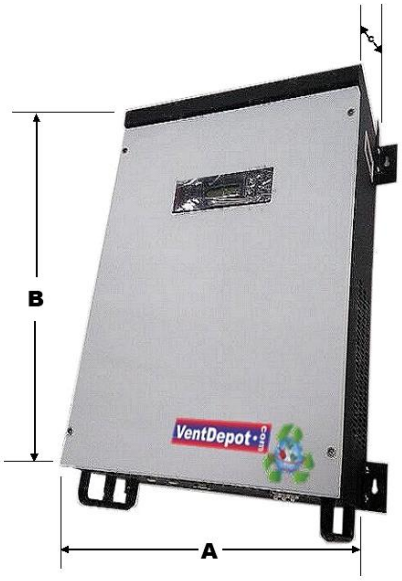

Diagrama de Generación Eléctrica: Generador Eólico Vertical, BladeKit.

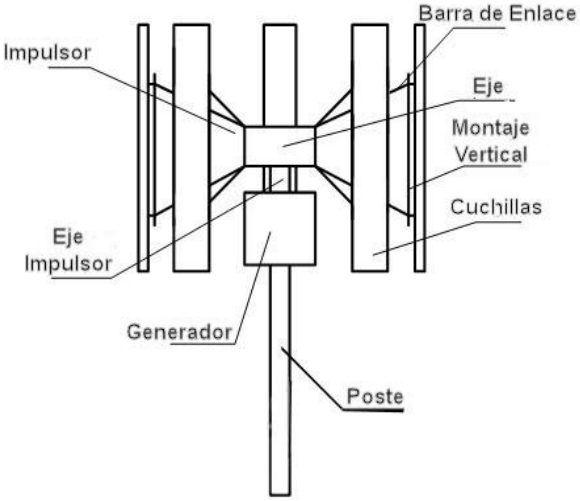

BladeKit

Ficha Técnica

Sistema On-Grid Generación Eléctrica Generador Vertical, BladeKit.

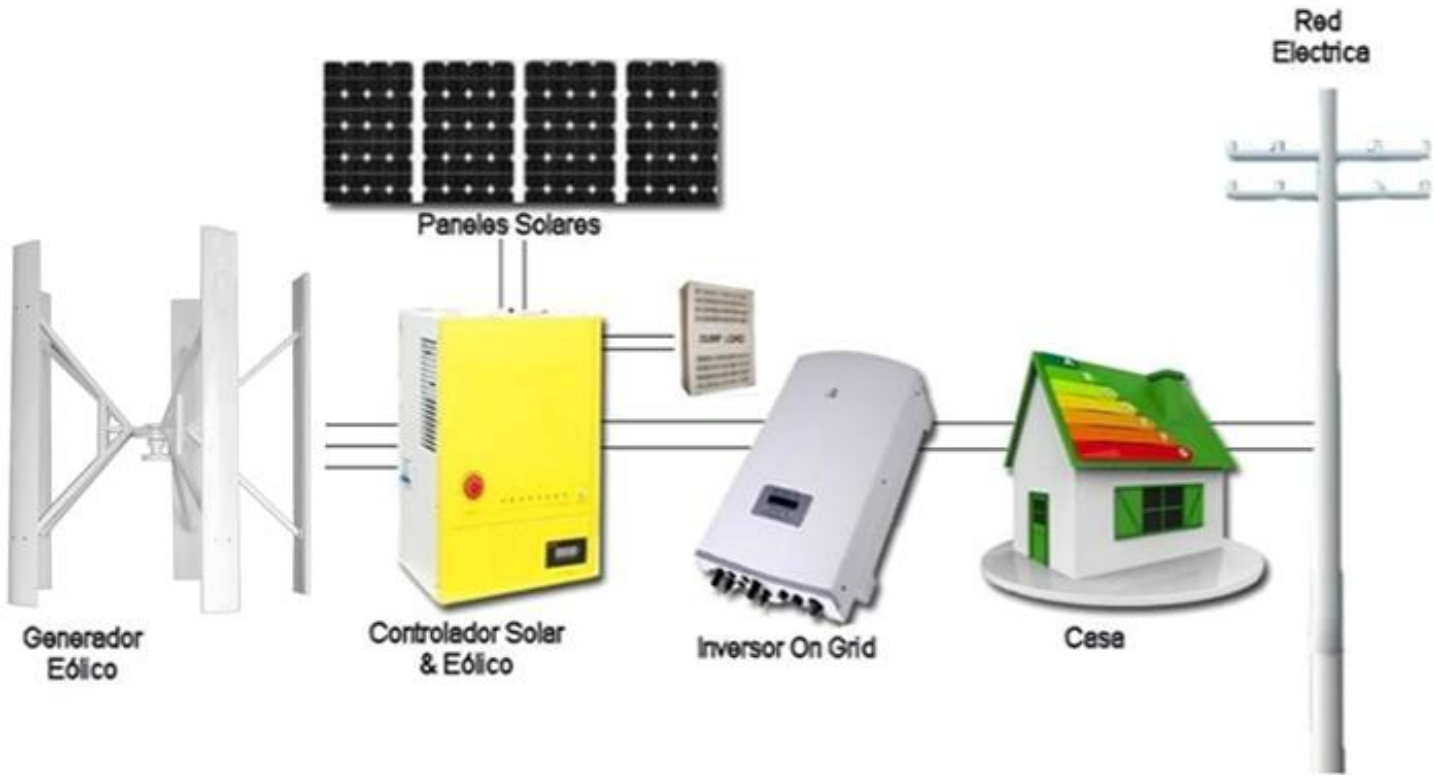

Aplicaciones de Generación Eléctrica: Generador Eólico Vertical, BladeKit.

User Manual

Vertical axis wind generator

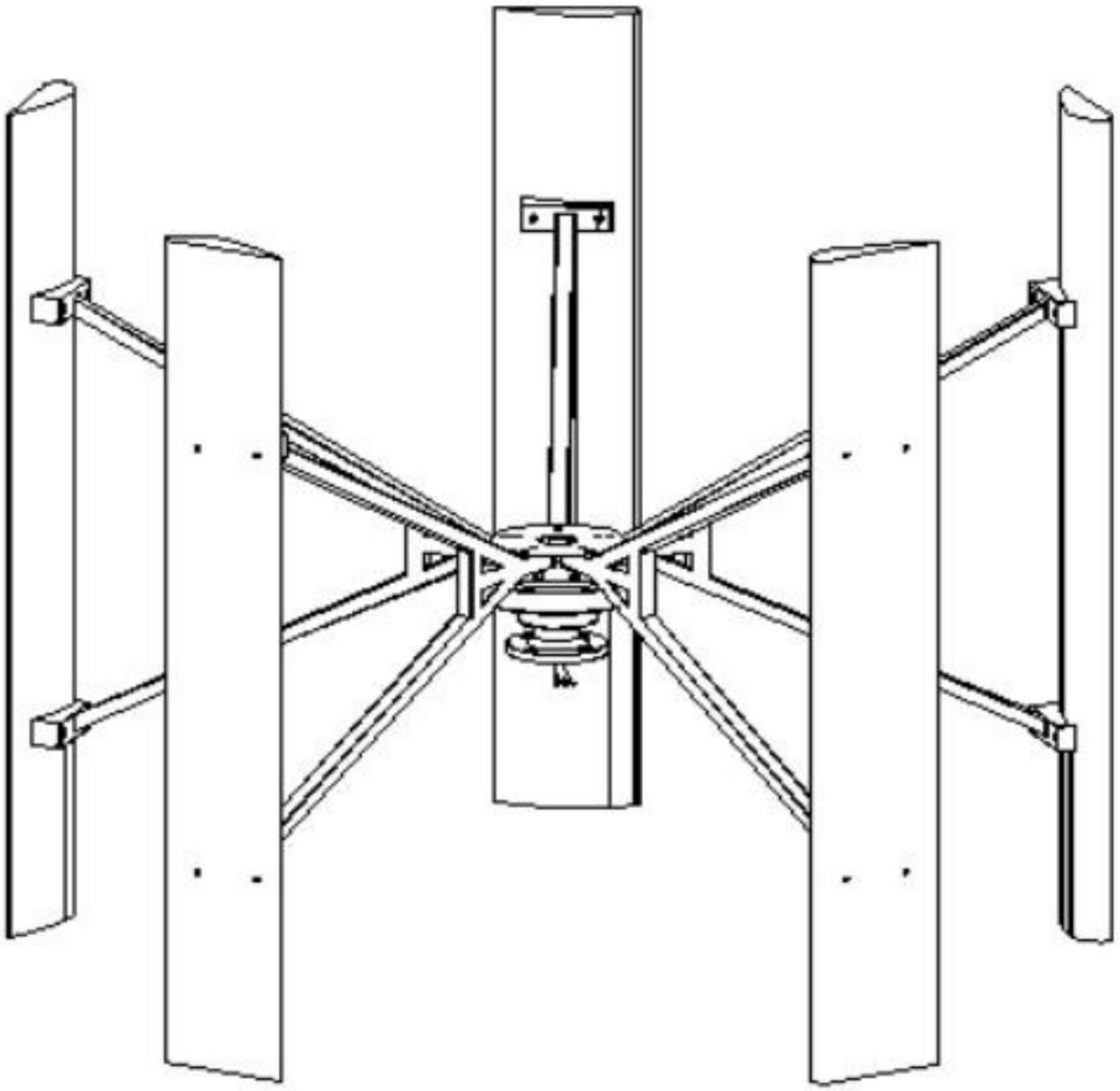

Content

1 Overview
2 The installation of VAWT
3 The configuration of generating system4 Routine maintenance
5 Trouble clearing
6 Introduction of VAWT
7 Accessory and installation diagram

Thank you for your buying our products----vertical axis wind power generator. Please readthe manual carefully before you operate the new machine. It is not only good to guarantee the products in safe and normal operation, but also (it is) conducive to bring their advantages into full play. We hope the products----vertical axis wind power generator will make you bright and happy.

1. Overview

VAWT H series wind power generating set utilize a new aerofoil vertical axis windwheel and magnetic suspention structure, choose high strength glass fiber reinforced plastic and aluminum alloy to make blades. This series VAWT have earned many items of national patent, in the leading position. H series VAWT are widely used in the areas where are good environments for wind energy. It can offer the uninterrupted power supply (UPS) for electrical equipment in areas, where are no electricity. It is suitable for off-grid system and on-grid system.

2. The installation of VAWT

i The place (of installation):

The place is very important for generated energy and safe in operation (the reference is below):
A good place should meet with two basic requirements: the higher average windspeed and the weaker turbulence.

(i) The average wind speed is higher, the generated power is higher and the generator will generate more electricity.(The wind energy is proportional to three cubed of the wind speed. For example, the wind speed of 5m/s can generate nearly twice more electricity (energy) than that of the wind speed of 4m/s.)

(ii) If the air current is unstable and the turbulence current is serious, the possibility of damage of the wind power generator will be heavier. It is bad (not good) for the generator to operate well and safe in a long time (many years), what's more, the turbulence current will affect the wind power generator to reduce the generated energy directly. The high wind speed area where the turbulence is serious is absolutely not available as the place of installation.
The tower should be higher, because the height from floor is higher, the windspeed will be heavier, and the air current will be more stable. In the flat area, the height of wind power generator should be above 6 meters.

To air current, trees and some buildings will be the barriers (obstacles). Around the obstacles (barriers), there will be a high, wide, slow-moving and inordinate air current zone. We should avoid installing the VAWT in this area.
The data bellowed can be referred to:

(i) The height of tower should be at least higher 6 meters than the highest barriers(obstacles) that away from generator 150 meters.

(ii) If we have to install the wind power generator near the barrier, the height of tower at least twice than height of barrier ,while the height of tower should be less than 12 meters.

ii According to the specific conditions, the directions of foundation construction:

If the foundation is hard rock formation, the ground should be leveled off.
If the foundation is soft rock formation,2×2 square meters, the ground should be tamped in order to avoid the foundation sinking.
If the foundation is the soft sand bed, dig a hole(1.5m×1.5m), the depth is 2 meters. On the bottom layer, put clay 300cm in thickness, and then tamp.

3. The configuration of generating system

After you buy our wind power generator, you can configure the devices below into generating system, according to your specific condition. Please refer to our suggestion:
The configuration instruction of H series small wind power generator system:
Controller: To make sure the wind power generator connect with the controller before setting up the tower, then turn off the controller, make sure the controller in stopped state (put the switch in "**off**" position), after setting up the tower, make sure the controller connect with storage battery correctly and then turn on the controller (put the switch in "**on**" position).
Controller/inverter: for the clients who need the alternating current, match 230V(110V) 50Hz (60Hz).
Cable: If we take improper wire diameter or the distance between the generator set and storage battery is improper, which will lead to loss the electrical energy.
The minimum wire diameter (cable conductor specification):
The distance between the generator set and storage battery(m)＜50 50-100 100-150

4. Routine maintenance

The reliability of H series VAWT is very high; there is no need to maintain regularly. But for wind power generator-tower-electric transmission line system, we should check and maintain regularly in order to make the system operate well.
(i) Check the drag line of tower; If it loosens, we should taut (strain) them in time. Especially in these conditions: in the first three months (after setting up the tower);
after the strong wind.
(ii) Check the connection point of electric transmission line(fastness or not, corrosion or not).
(iii) Check and maintain the storage battery regularly according to the normal requirements.
(iv) Before the extremely atrocious weather (strong wind or typhoon) comes, in order to protect from unexpected things(danger), we should lay the tower down.

5.Trouble clearing

The design of H series VAWT is according to the principle of no failure and maintenance-free, so we should install and operate it correctly. If there's something wrong to influence the machine, please refer to the items:

Trouble	Reason	Method
Shake of VAWT	Wire rope is loose; Set bolt of blades is loose; Blade is damaged; Blade is frozen(ice is on surface)	Taut, fastness; Taut, fastness; Change a new one in order to balance; Clear the ice
Unusual noise	Fastening piece is loose; Bearing is damaged; Friction between parts of VAWT;	Lay VAWT down, check the fastening piece; Change a new bearing; Check
Rotor speed is lower	Friction of generator rotor; Generator stator winding short-circuit or output short-circuit; The switch of controller is in “off” position	Change a new bearing; Check the short-circuit part and insulate; The switch of controller is in “on” position
Output voltage is lower	The rotor speed is lower; There is short-circuit in stator winding three phase; Short-circuit in controller; Lower output voltage electric transmission line is longer, the diameter of lead(wire) is thin	Check the reason and restart; Check the short-circuit part and insulate; Change a new one; Shorten the transmission line or make the diameter of lead thick, reduce the loss
Generator alternating current circuitry have no current	Generator alternating broken circuit or fuse fusing current; Output line broken circuit	Check the reason, switch on; Check the broken circuit part and switch on
Generator output alternating current is normal but no direct current	Direct current fusing current; Output line broken circuit; The rectifier in controller is damaged(broken)	Change a new one; Check the broken part and switch on; Change a new one
Output capacity of storage battery is not enough	Output voltage of generator is too lower or has no generating electricity; The wiring terminal of storage battery is acid erosion, the electric conduction is not good; Storage battery lose effectiveness	Check; Clearing the connect parts, make sure connection well and fastening, then daub the barrier cream; Change a new one

6. Introduction of VAWT

i Material introduction

(1) Wind turbine blades: We utilize high strength glass fiber reinforced plastic or aluminum alloy to make blades. The wind rotor operate well (stably and quietly). This kind of new aerofoil is elaborately designed by aerodynamic and hydro mechanical specialists (experts). It start-up wind speed (or cut-in wind speed) is very low, and the wind energy (rotor power) coefficient is very high.

(2) Generator: It is made up of the superior high strength permanent magnetic material. The volume is small and the weight is light, the generating electricity coefficient is high. The generator specialist (expert) use special electromagnetic technology to make the generator have extremely low start-up drag torque, which can make sure the VAWT start-up in the gentle breeze. The generating electricity coefficient, start-up performance and over speed overload capacity of generator are all in leading position in this field.

(3) Whole machine: It is made up of steel precision casting. It is widely used in air temperature: -30℃-60℃, high humidity and salt mist (in some atrocious weather). It has high reliability series small VAWT, whose appearance is beautiful, installation is easy. You can enjoy the clean (green) energy, at the same time, you will see a beautiful scenery.

7. Accessory and installation diagram

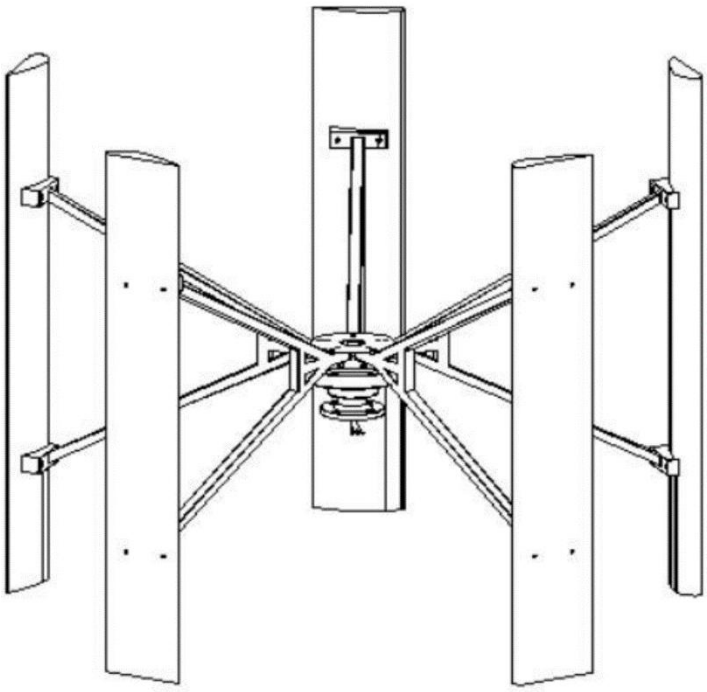

Parts

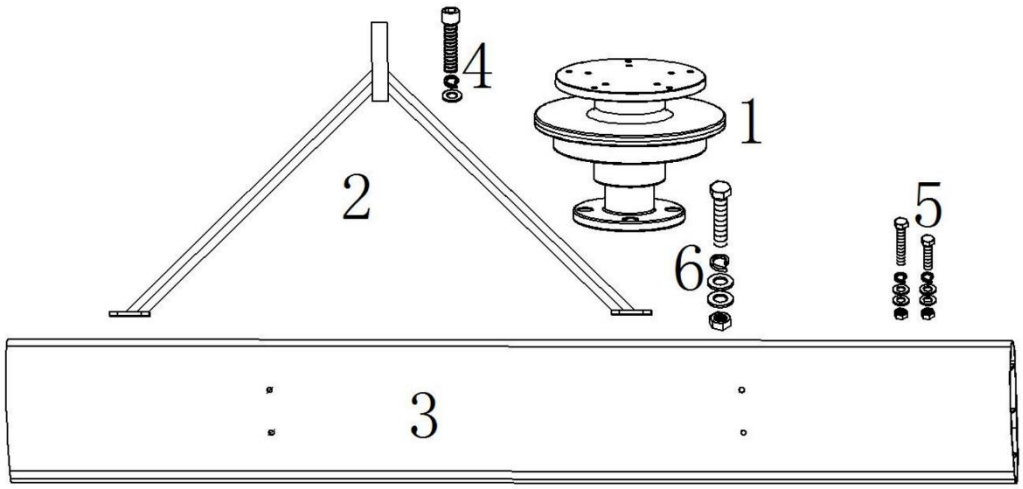

Wind Turbine Installation

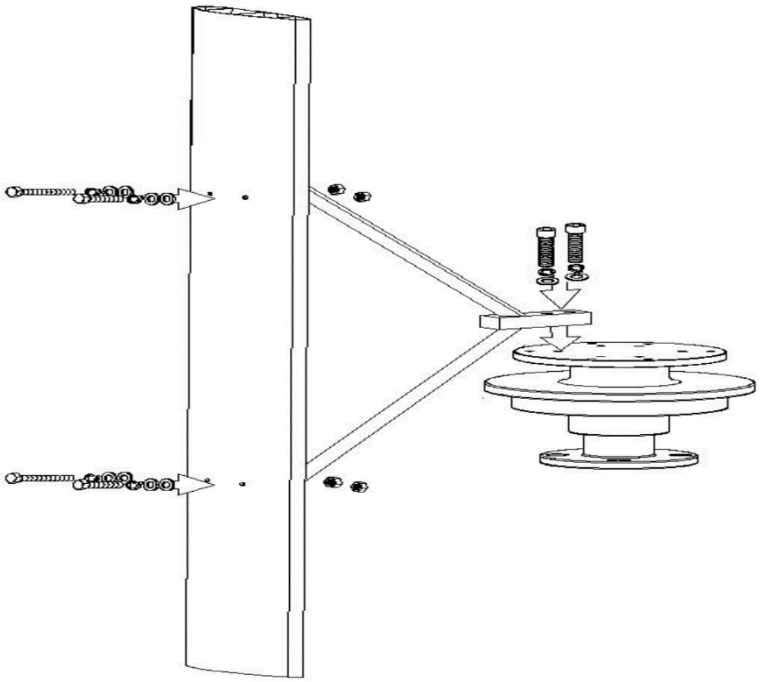

Guyed cable pole Installation

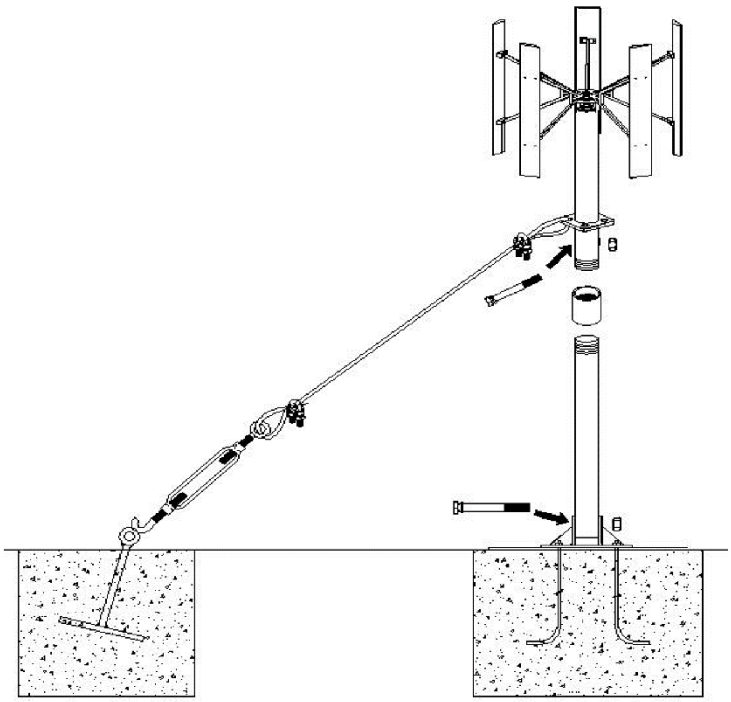

Fully Assembled Wind Turbine

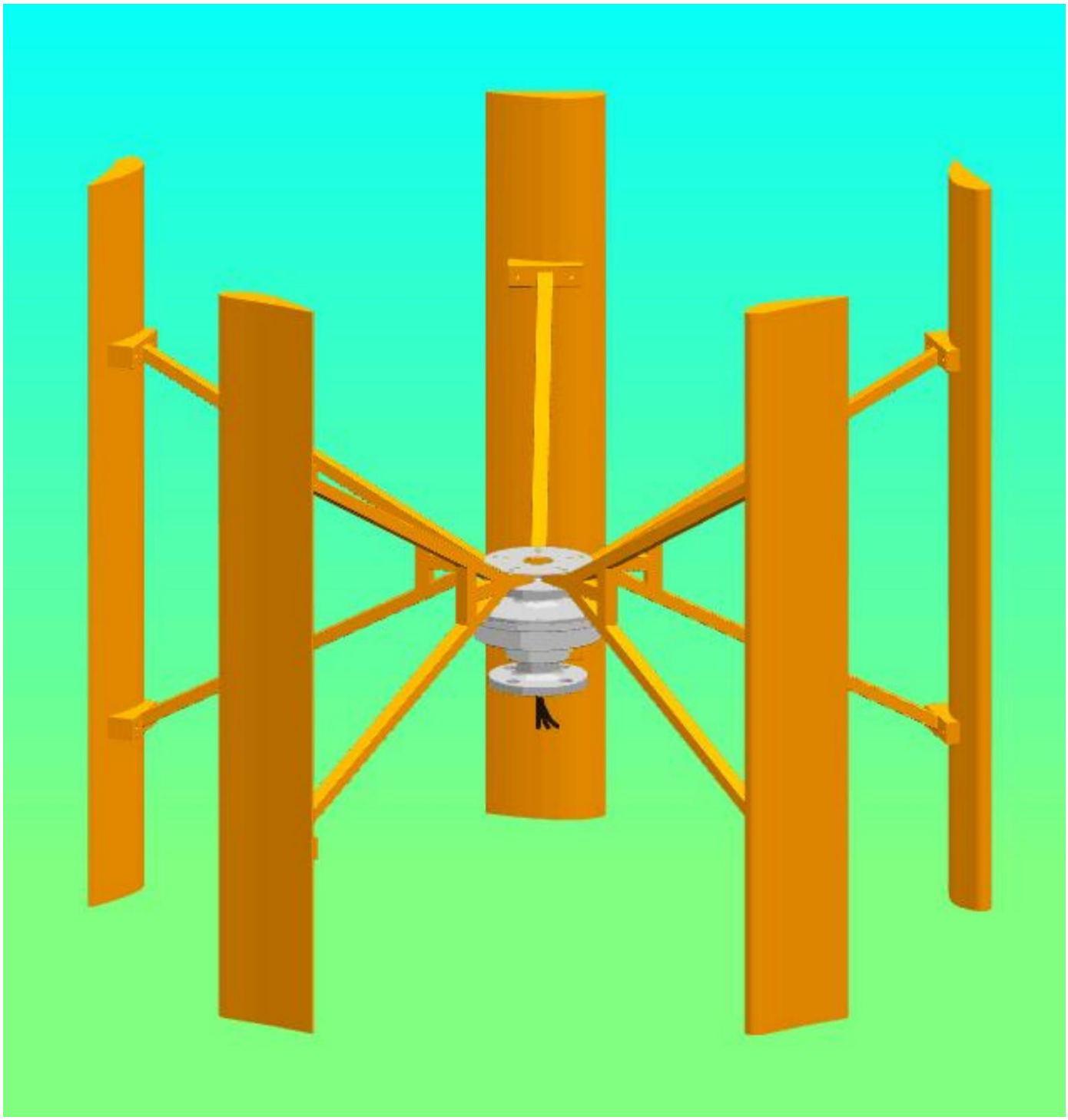

Wind turbine installation steps

1. Assemble the blade: Align the holes of wind wheel bracket and the blade, cover the bracket bolt with flat washer, then put it through the hole of the wind blade, tighten the nut. So does the other blades

2. The installation sequence of the wind generators can follow the steps as the pictures.

2-1. Place the steel bracket on the ground; block up the flange joint to 1.3m.

2-2. Align the wind generator flange to the tower flange. Cut away insulating layer of current transmission wire end (which are to be connected with controller) for 10mm, then short circuit the exposed copper wires (screwed together).

2-3. Fit the flange bolt with flat washer, make its head above, bolt thread below, put it through the appropriate hole of the flange base. And then connect it to the tower flange, sheath the flat washer, spring washer in the bolt thread, and finally tighten the nut in the flange bolt wire with a wrench. So does the other blots, flat washers, spring washers, nuts and so on. Tightening force can refer to pic-2.

3. Mount the bracket on the wheel hub, cover it with the clamp, fit the stainless steel boltswith spring washer, flat washer, and then put it through the hole of the hub, tighten the bolts.

Attention:

- Battery should be connect with controller before wind turbine connected with controller.
- If above started instruction are not followed when assembling and installing the wind turbines, we are sorry that any problem or failure resulted are not to be covered by warranty.

Off Grid Wind Turbine System for your reference:

For 24V battery bank, connect 2 pieces 12V in series.

For wind solar hybrid controller, connect solar panels with controller together.

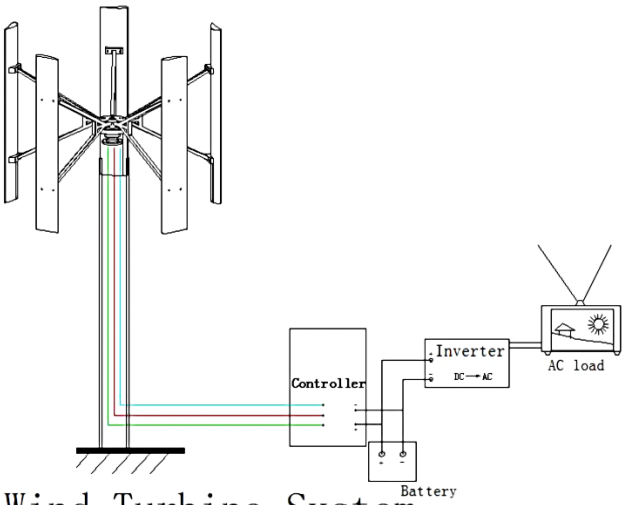

Wind Turbine System